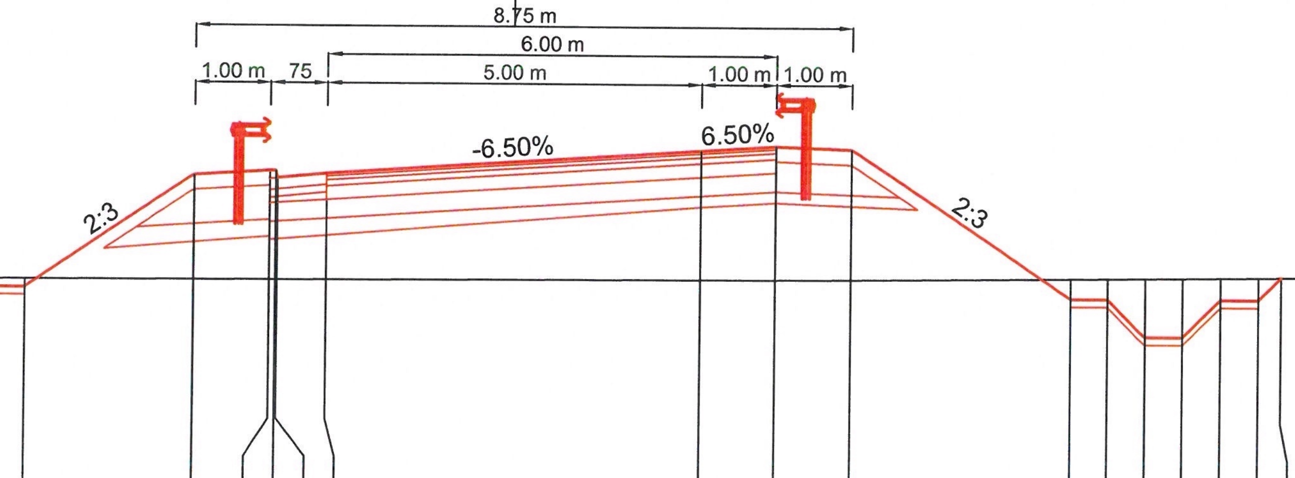

R.L. = 89.00

COTE PROIECT		91.82	91.72	91.72	91.22	91.22	91.72	91.72	93.23	93.29	93.29	93.19	93.26	93.58	93.65	93.61	91.64	91.64	91.14	91.14	91.64	91.64	91.94	
COTE TEREN	91.81	91.82	91.82	91.82	91.83	91.83	91.83	91.83	91.84	91.85	91.85	91.85	91.85	91.87	91.87	91.88	91.91	91.92	91.92	91.93	91.94	91.94	91.94	92.02
DISTANTE	-15.00	-11.62	-11.51	-11.01	-10.51	-10.01	-9.51	-9.01	-6.75	-5.75	-5.67	-5.65	-5.00	0.00	1.00	2.00	4.95	5.45	5.95	6.45	6.95	7.45	7.75	15.00

KM = 100.00

SUPERVIZOR
D.R.D.P. TIMIŞOARA
BUN DE EXECUŢIE
DATA: 01.04.2022

SOCIETATEA COMERCIALĂ TOTAL ROAD S.R.L. BUCUREŞTI - ROMÂNIA

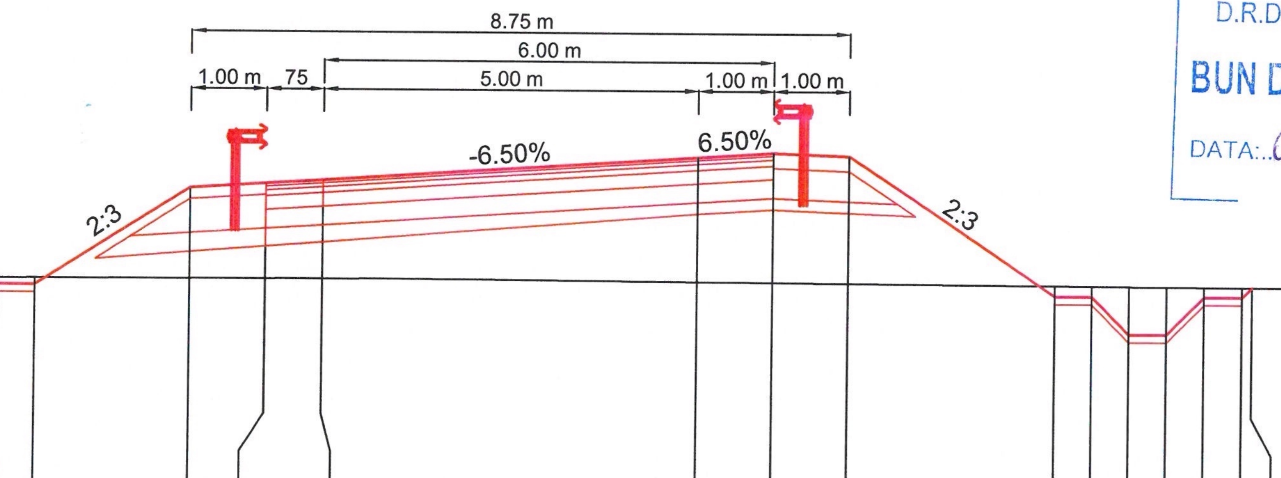

R.L. = 89.00

COTE PROIECT		91.76	91.67	91.67	91.17	91.17	91.67	91.67	92.96	93.04	93.09	93.41	93.48	93.44	91.60	91.60	91.10	91.10	91.60	91.60	91.73	
COTE TEREN	91.74	91.76	91.76	91.76	91.76	91.76	91.77	91.77	91.78	91.78	91.78	91.77	91.76	91.76	91.74	91.74	91.74	91.74	91.73	91.73	91.73	91.72
DISTANTE	-15.00	-11.41	-11.32	-10.82	-10.32	-9.82	-9.32	-8.82	-6.75	-5.75	-5.00	0.00	1.00	2.00	4.76	5.26	5.76	6.26	6.76	7.26	7.39	15.00

KM = 80.00

POPESCU A. ... VERIFICATOR PROIECTE

BENEFICIAR:

COMPANIA NATIONALA DE ADMINISTRAREA INFRASTRUCTURII RUTIERE S.A. (C.N.A.I.R. S.A.)

ANTREPRENOR:

TODINI CONSTRUZIONI GENERALI S.p.A.

TITLU PROIECT

PROIECTARE SI EXECUȚIE „DRUM DE LEGĂTURĂ AUTOSTRADA A1 ARAD - TIMIȘOARA - DN 69"

FAZA PROIECT	***CONTRACT NR.***
PROIECT TEHNIC DE EXECUTIE (P.T.E.)	92/7703/01.02.2021
	PROIECT NR. 08/2021

SPECIFICATIE	***NUME***	***SEMNATURA***
DESENAT	Teh. Sorin VASILACHE	
PROIECTAT	Ing. Mihai COROIAN	
SEF PROIECT	Ing. Catalin GRUIANU	
VERIFICAT	Ing. Adrian NISTOR	

DATA	***TITLU PLANSA:***
Martie 2022	LUCRARI DE INFRASTRUCTURA RUTIERA
MĂRIMEA A3	PROFILURI TRANSVERSALE CURENTE NOD DN69 - BRETEA 1
SCARĂ 1:100	***NUMAR PLANSA:*** PTC - 334 — ***PICHET*** -

Revizie		
NR.	***DATA***	***DESCRIERE***
0	08.2021	Emitere P.T.E.
1	09.2021	Conf. nr.290/DLA1-224
2	02.2022	Conf. ASR 92/93833

PAGE 1 / 1